COPAL ELECTRONICS

DIGITAL PRESSURE GAUGE

PG-208

INSTRUCTION MANUAL Ver.7.0

You are greatly appreciated for purchasing Copal's Model PG—208 digital Pressure Gauge. You should read this instruction manual thoroughly to operate the PG—208 in optimum state.

For inquires：

COPAL ELECTRONICS

Nishi-Shinjuku Kimuraya Bldg., 7-5-25
Nishi-Shinjuku, Shinjuku-ku, Tokyo 160-0023 Japan Tel,03-3364-7055

§ 1. Handling Note

⚠ CAUTION This caution mark describes when there is a possibility that user may suffer from damage or physical damage may occur if the product is used improperly.

⚠ CAUTION

(1) Diaphragm
Do not touch or scratch the diaphragm at the edge of the fitting, as this may alter the performance characteristics or damage the diaphragm, and cause malfunctioning.

(2) Piping for stand-alone type
For piping, use the hexagonal portion of the pressure port for driving.

(3) Media to be used
The Pressure Gauge should be used for fluids that cannot corrode the diaphragm of SUS316L, pressure port of SUS 316 and O-ring of fluoro rubber.

(4) Excessive pressure
The pressure to be measured is within the specified range.

(5) Internal battery
①Replace battery with Toshiba Battery Co.,Ltd./ERVM3.6V/lithium battery only. Use of another battery may present a risk of fire or explosion. If you need replace battery, please place an order with us.
②When "LOBAT" sign is displayed, the battery should be replaced.
③The battery used in this device may present risk of fire of chemical burn if mistreated. Do not recharge, disassemble, heat above 100℃ (212°F), or incinerate.
④Dispose of used battery promptly. Keep away from children. Do not disassemble and do not dispose of in fire.

(6) Maintenance
If the Pressure Gauge gets dirty, wipe it off with hardly squeezed cloth containing a neutral detergent. Do not use any thinner and benzine.

(7) Protection against noises
①Noises having mixed in the switch output or power line may cause the Pressure Gauge to change the pressure indication, malfunction or be broken.
Take some measure to put the Pressure Gauge away from power line or use shielded wire. It is effective to ground the Pressure Gauge.
②If the switch output has an induction load such as relay or solenoid connected to it, it should have a surge absorber circuit put in it. The relay contacts should have a contact preventive circuit put in it to prevent noises from being generated.

(8) Prohibition of short-circuiting the switch terminals
Do not short-circuit the switch output terminal to any power terminal. The internal circuit may be broken.

§ 2. TRANSPORTATION & STORAGE

(1) The product,which is a precision instrument, must be taken special care not to be damaged by impact nor by being dropped when it is trasported and in storage.
(2) The product must be avoided in storage where is dusty, dripping and vibrated.

§ 3. Specification

(1) Model

PG－208－ [ ] －□△

Series name　　Series (Table 1)　　Type (Table 2)

Table 1

SERIES	PRESSURE RANGE	MAX PRESSURE	Break-down Pressure	RESOLUTION	UNIT
102G	0～1.000	2	5	0.001	kgf/cm²
102GP	0～100.0	200	500	0.1	kPa
102VP	0～－100.0	200	500	0.1	kPa
102VH	0～－735 ＊	1471	3675	1	mmHg
103G	0～10.00	15	20	0.01	kgf/cm²
103GP	0～1000	1500	2000	1	kPa
103GMP	0～1.000	1.5	2.0	0.001	MPa

＊Measurement can be made upto "－760mmHg" for 102VH.
(Accuracy not guaranteed beyond the rated pressure.)

Table 2

TYPE	SWITCH OUTPUT	OPTIONAL OUTPUT	POWER SOURCE
－S	HI、LO	－	Internal lithium battery
－3－S	HI、LO	Voltage	External 5～24 Vdc

(2) Measurement…Gauge pressure.
(3) Indication　…3-1/2 digits, 000～1999Max, digital LCD display.
(4) Indication　…Around 3 times/sec.
(5) Accuracy　…±0.5%F.S.±2digit (at25℃±5℃)
(6) Temperature characteristics
at zero point ; ±0.1%F.S.／℃　±2digit
in SPAN　; ±0.05%Reading／℃　±2digit
(7) Switching features
Number of set points…Two,HI and LO,activatid at upper limit.
Set range divisions　…000～1000, HI and LO.
Setting method　…With trimmer each for HI and LO.
Set value indication can be made to time with setting switch.
Operating accuracy　…Within ±3 divisions from indication value.
Difference　…Within 4 divisions,fixed.
Output system　…NPN open collector of 30Vdc and 40 mA at max.
Operating indication …"H"in HI mode or "L"in LO mode at ON output.
(8) Operating temperature…0～50℃
humidity…35～85%RH,no sweating allowed.
(9) Storage temperature …－20～70℃,with lower humidity than 65%RH.
(10) Net weight　…Net weight, Around 385g.
(11) Pressure port…G3/8 (PF3/8)
(12) Options (see Table 2)…
a.Internal battery
Type…Lithium battery, ER6VM.
Serviceable time…One year (9000 hours), continuously operable.
Has a battery change indicator BATT.
b.External power source
Input voltage　…5～10 or 10～24 Vdc (see Table 2).
Current consumption…Less than 20mA.
c.Analog voltage output
Output voltage　…0～1V,not isolated.
Accuracy…±1%F.S.,which is added to main accuracy.
Load resistance　…Higher than 1 kohm.

§ 4. Exterminal Dimensions tolerance(±0.5mm)

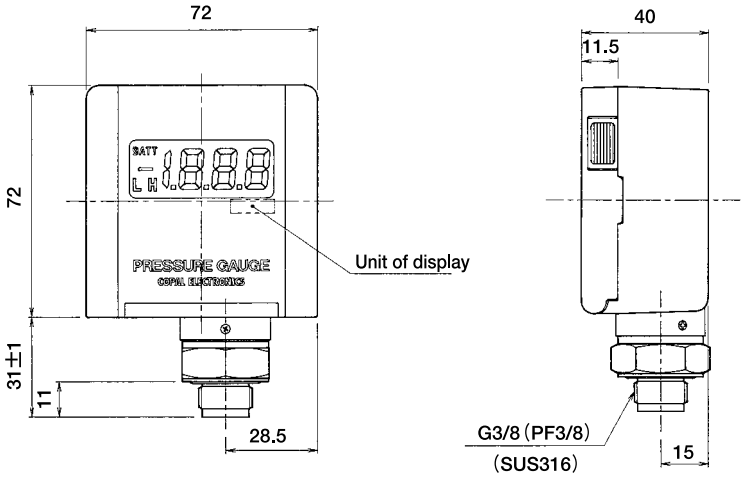

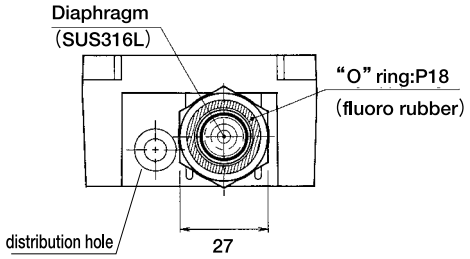

§ 5. Terminal Wiring

Proceed on the PC boad inside the main body.

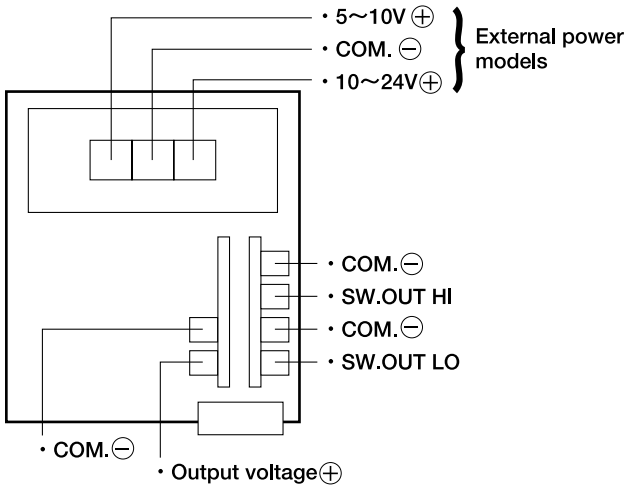

Select one of the terminal blocks for connection depending on the power voltage. Do not apply any voltage exceeding the voltage range. For output wiring, use thinner wire than AWG26.

The each common ⊖ of external power terminal and voltage output terminal are connected to the internal circuit.

§ 6. Output Type

Switch output of npn open collector type with 30Vdc and 40mA at maximum.

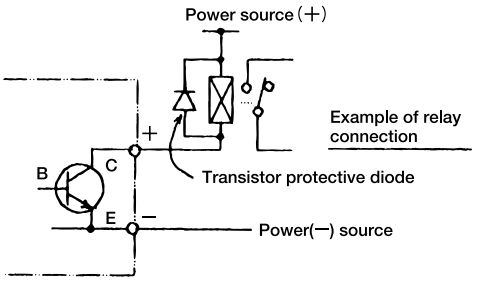

§ 7. Front Panel Controls and Features

(1) Front panel controls

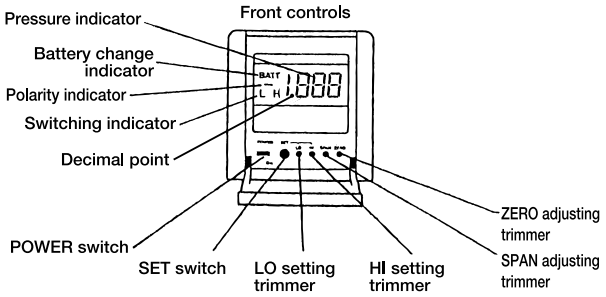

(2) Description of the features

1. Pressure indicator — Shows a pressure value entered to the pressure port. Also shows a set value given with the set switch.
2. Polarity indicator — Shows the negative(−) upon negative pressure.
3. POWER switch — Turns on or off the power to the Pressure Gauge.
4. SET switch — Selects a mode to check a HI or LO set value. If you press the SET switch once, the indication will be automatically changed in the sequence shown below. To check the LO set value, wait for around 20 seconds after pressing the SET switch.

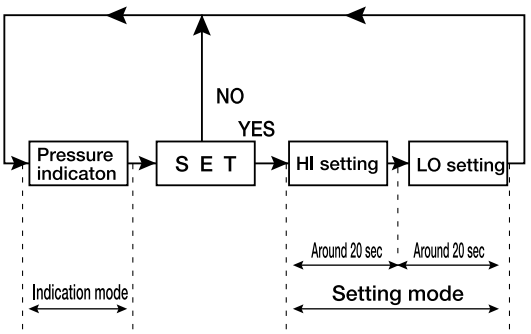

If setting ends or to interrupt setting in the course, press the SET switch again. Then the pressure will be indicated.

5. HI setting trimmer — Used to adjust pressure to the HI set value that is indicated with the SET switch.
6. LO setting trimmer — Used to adjust pressure to the LO set value that is indicated after the HI setting time has elapsed.
7. SPAN adjusting trimmer — Used to adjust the sensitivity so that the pressure can indicate the full scale with the rated pressure applied to the pressure port. As the trimmer is calibrated, it is sealed up.
8. ZERO adjusting trimmer — Used to adjust the sensor to zero. The pressure indication should be adjusted to "000" with no pressure applied.

§ 8. How to use

(1) Make wiring by following Section 5, "Terminal Wiring."
(2) Turn the POWER switch on. For the external power type, supply to it the power indicated on the name plate.
(3) Check to insure that the pressure indication is zero with no pressure applied. The zero indication may be changed slightly with posture of the main body. If the indication is over 5 counts, make zero adjustment with the ZERO adjusting trimmer.
(4) Make HI and LO settings with the SET switch and HI and LO setting trimmers (see Section 7, step 5).
(5) Apply a pressure to the Pressure Gauge. Then it will indicate the measured value.
(6) If the switch output is on, the Pressure Gauge will show "L" or "H".

§ 9. WARRANTY

This product is covered by warranty for a period of one year from the date of delivery.
This warranty is only applicable to this product itself.
This warranty covers free-of-charge repair and replacement for defects occurring through design or manufacturing inadequacy of NIDEC COPAL ELECTRONICS CORP.
Even during the warranty period, the following failures will be handled on a fee basis.
(1) Failure or damages occurring through misuse or disoperation performed not following the instruction manual, the catalog and the specification sheet.
(2) Failure or damages occurring through improper modification, adjustment, or repair.
(3) Failure or damages occurring through technically and scientifically unpredictable factors.
(4) Failure or damages occurring through natural calamities, fires or other inevitable accidents.